Double Vision

Gas Fireplace

real flame
the hearth of australia

Double Vision

Now your fireplace can be enjoyed from two rooms. With the unique Double Vision gas fire, the ambience of the fire can be experienced as a see-through fire from both rooms.

With its zero clearance firebox construction, a simple timber frame is all that is required to construct the focal point of the home.

A simple trim in either stainless steel or black, gives the unit a modern contemporary finish

Product Specifications

- Millivolt ignition
- 52 mjh gas input
- Primarily a decorative appliance
- Stainless steel or black pedastal base and tray
- 3 or 4 sided trims

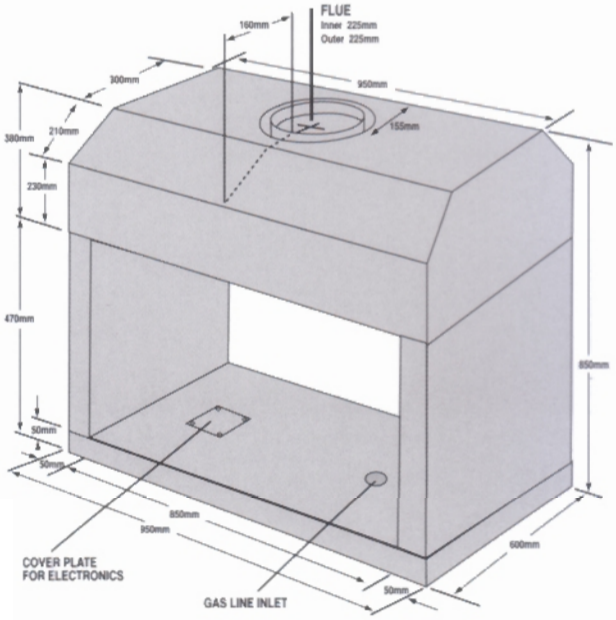

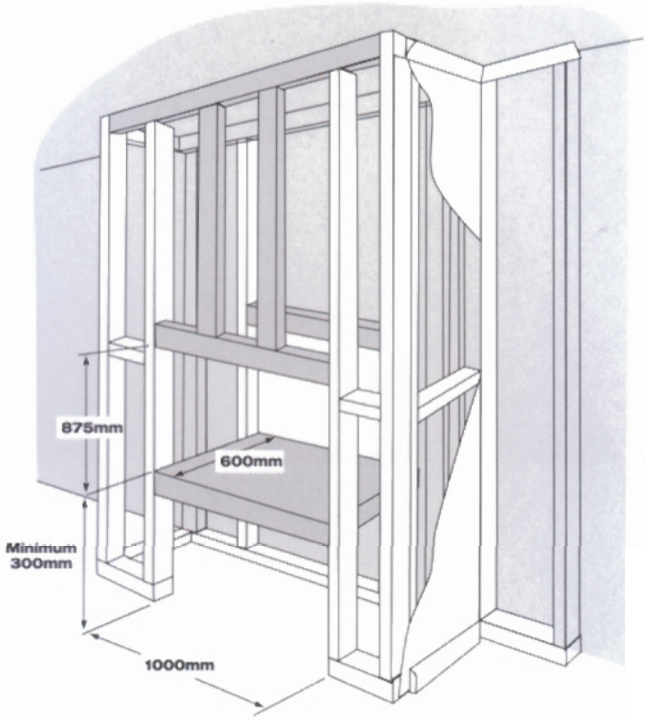

real flame
the hearth of australia

Head Office/Showroom www.realflame.com.au

300 Swan St, Richmond VIC T: 03 9428 4443

Showrooms

21 Malvern St, Bayswater VIC T: 03 9738 0399

654 Pacific Hwy, Chatswood NSW T: 02 8905 0189

179-175 Magill Rd, Norwood SA T: 08 8132 0371

7/8 Leopold St, Fortitude Valley QLD T: 07 3257 0394

Available from: